E4 01 FIRST FLOOR – EAST – LIGHTING
FLOOR PLAN
SCALE: 1/8" = 1'-0"

3 PHASE
4 WIRE
100 AMP BUSSING WITH
MAIN LUGS ONLY

PANEL LEE

277/480 VOLTS
SURFACE MOUNT
18 K AIC MIN. INTEGRATED INTERRUPTING CAPACITY

NEUTRAL/GROUND BAR

DESIGNATION	NO.	A	B	C	NO.	DESIGNATION
LIGHTS	1	•			2	SPARE
↓	3		•		4	↓
SPACE	5			•	6	SPACE
	7	•			8	
	9		•		10	
	11			•	12	
	13	•			14	
	15		•		16	
↓	17			•	18	↓
REMARKS	MLO					

3 PHASE
4 WIRE
225 AMP BUSSING WITH
MAIN LUGS ONLY

PANEL LC1

277/480 VOLTS
SURFACE MOUNT
18 K AIC MIN. INTEGRATED INTERRUPTING CAPACITY

NEUTRAL/GROUND BAR

DESIGNATION	NO.	A	B	C	NO.	DESIGNATION
LIGHTS	1	•			2	LIGHTS
	3		•		4	
	5			•	6	↓
	7	•			8	SPARE
	9		•		10	
↓	11			•	12	
SPARE	13	•			14	
	15		•		16	
	17			•	18	↓
	19	•			20	SPACE
	21		•		22	
↓	23			•	24	
SPACE	25	•			26	
	27		•		28	
	29			•	30	
	31	•			32	
	33		•		34	
	35			•	36	↓
	37	•			38	SPARE
	39		•		40	3P–20A
↓	41			•	42	–
REMARKS	MLO					

DIMMER PANEL 1173 SCHEDULE

AREA	ZONE	CIRCUIT	NO. FIXTURES/TYPE	WATTS	REMARKS
SPOT – FRONT	1		1/AC	300	
SPOT – RIGHT	2		1/AB	200	
SPOT – LEFT	3		1/AB	200	
SPOT – OVERHEAD	4		1/AA	300	
DOWNLIGHT – FRONT	5		6/Z	750	
DOWNLIGHT – FRONT SEATS	6	A	6/Z	1500	
DOWNLIGHT – FRONT SEATS	6	B	6/Z	1500	
DOWNLIGHT – REAR SEATS	7	A	6/Z	1500	
DOWNLIGHT – REAR SEATS	7	B	6/Z	1500	
DOWNLIGHT – REAR	8		5/Z	1250	
WALL SCONCE – SIDES	9		11/Y	1320	
WALL SCONCE – REAR	10		4/Y	480	
FLUORESCENT – FRONT	11	A	5/B	400	NON–DIM HALF OF LAMPS
FLUORESCENT – FRONT	11	B	5/B	400	
FLUORESCENT – SEATS	11	C	18/B	1440	
FLUORESCENT – SEATS	11	D	18/B	1440	
FLUORESCENT – CHALKBOARD	12		1/AD	240	

DIMMER PANEL 1232 SCHEDULE

AREA	ZONE	CIRCUIT	NO. FIXTURES/TYPE	WATTS	REMARKS
SPOT – FRONT	1		1/AC	300	
SPOT – RIGHT	2		1/AB	200	
SPOT – LEFT	3		1/AB	200	
SPOT – OVERHEAD	4		1/AA	300	
DOWNLIGHT – FRONT	5		2/Z	500	
DOWNLIGHT – FRONT SEATS	6		6/Z	1500	
DOWNLIGHT – REAR SEATS	7		6/Z	1500	
WALL SCONCE – SIDES	8		8/Y	960	
WALL SCONCE – REAR	9		6/Y	720	
FLUORESCENT – FRONT	10	A	3/B	240	NON–DIM HALF OF LAMPS
FLUORESCENT – FRONT	10	B	3/B	240	
FLUORESCENT – SEATS	10	C	6/B	480	
FLUORESCENT – SEATS	10	D	6/B	480	
FLUORESCENT – CHALKBOARD	11		1/AF	160	

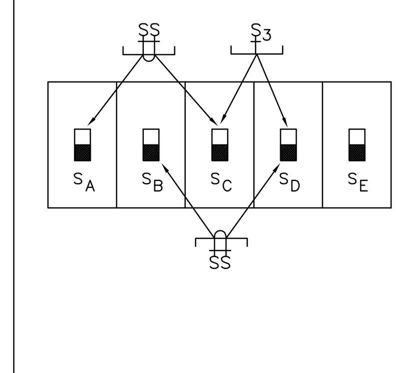

E4 02 SWITCHGANG DETAIL
NO SCALE

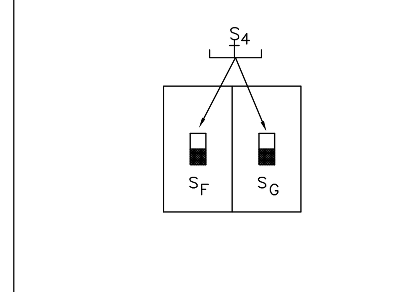

E4 03 SWITCHGANG DETAIL
NO SCALE

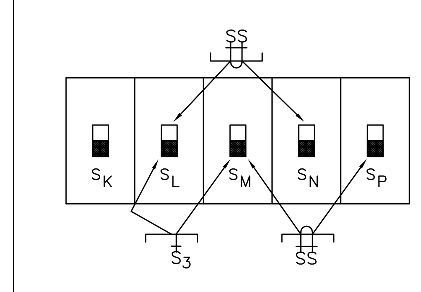

E4 04 SWITCHGANG DETAIL
NO SCALE

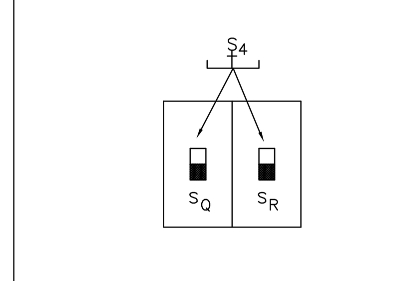

E4 05 SWITCHGANG DETAIL
NO SCALE

KEY PLAN

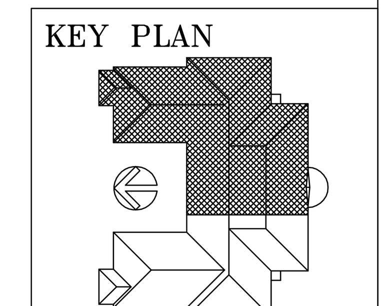

JEFFERIES AND FARIS ASSOCIATES
ARCHITECTS ▪ PLANNERS
SEA TOWERS SUITE 201
2002 EASTWOOD ROAD
WILMINGTON, N.C. 28403
TEL: 910.256.6633
FAX: 910.256.9088

SCIENCE BUILDING
UNIVERSITY OF NORTH CAROLINA AT WILMINGTON
CODE 49388 ITEM 301 ID#6089280301A

SHEET TITLE:
FIRST FLOOR EAST – LIGHTING DETAILS

BUFFALOE, MORGAN & ASSOC., INC.
CONSULTING ENGINEERS
1115 LAKE WHEELER ROAD
RALEIGH, N.C. 27603
(919) 833–1927

NORTH CAROLINA PROFESSIONAL SEAL 3494 ENGINEER RAY E. MORGAN

DRAWING REVISIONS:

NO.	DATE:	REMARKS:

DATE: 16 MAY 1994
PROJECT#: 9305
DESIGNED BY: JEY, DDS
DRAWN BY: SMC
CHECKED BY: SAB
CHECKED BY: REM

SHEET NO.: E4
OF 17

43092